MEET INTERNATIONAL STANDARD API5B

EXTERNAL THREAD TAPER MEASURING INSTRUMENTS

principle of measurement

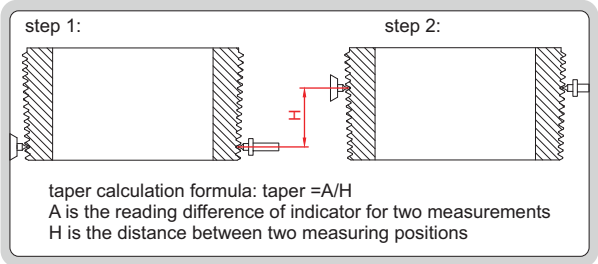

- Measure the taper of external thread
- Dial indicator stroke: 0.5"
- Dial indicator graduation: 0.001"
- Optional accessory: ball points (code **6252** series)

Code	Range (L)	Accuracy	H	W
2230-10	0-10"/0-254mm	0.0015"	400mm	200mm
2230-45	1-4 1/2"/25.4-114.3mm	0.0015"	278mm	178mm
2230-16	8-16"/203.2-406.4mm	0.0015"	600mm	260mm
2230-20	8-20"/203.2-508mm	0.0015"	680mm	260mm

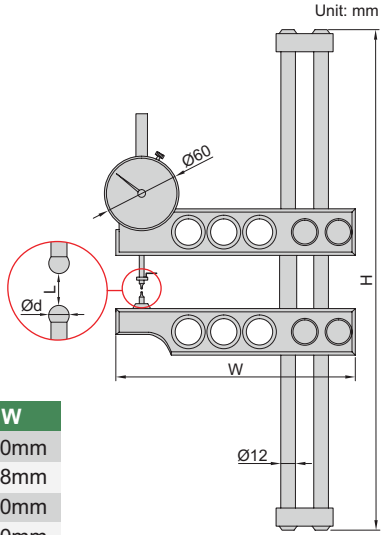

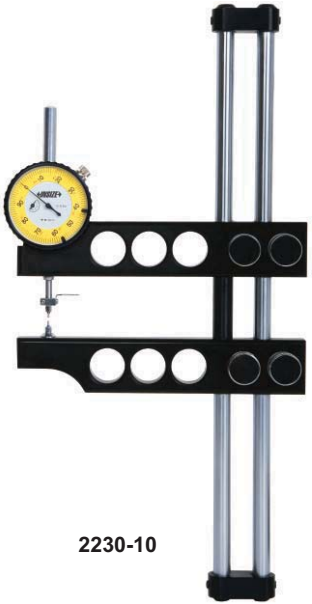

2230-10